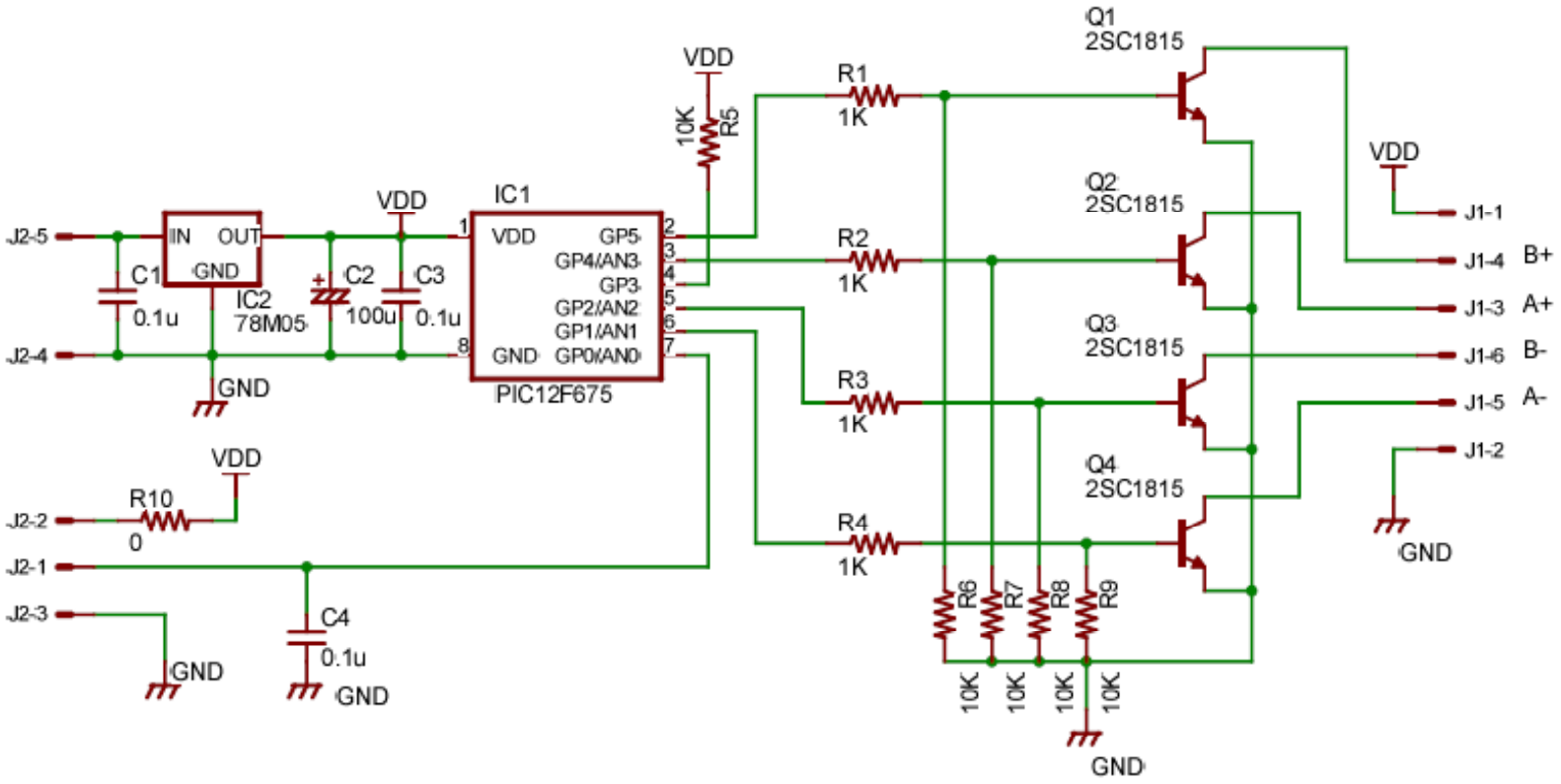
J2-5
J2-4
IN
OUT
GND
C1
0.1u
IC2
78M05
GND
VDD
C2
100u
C3
0.1u
IC1
VDD
GP5
GP4/AN3
GP3
GP2/AN2
GP1/AN1
GP0/AN0
GND
PIC12F675
VDD
10K
R5
R1
1K
R2
1K
R3
1K
R4
1K
Q1
2SC1815
Q2
2SC1815
Q3
2SC1815
Q4
2SC1815
VDD
J1-1
J1-4
B+
J1-3
A+
J1-6
B-
J1-5
A-
J1-2
GND
J2-2
R10
0
VDD
J2-1
J2-3
GND
C4
0.1u
GND
R6
R7
R8
R9
10K
10K
10K
10K
GND