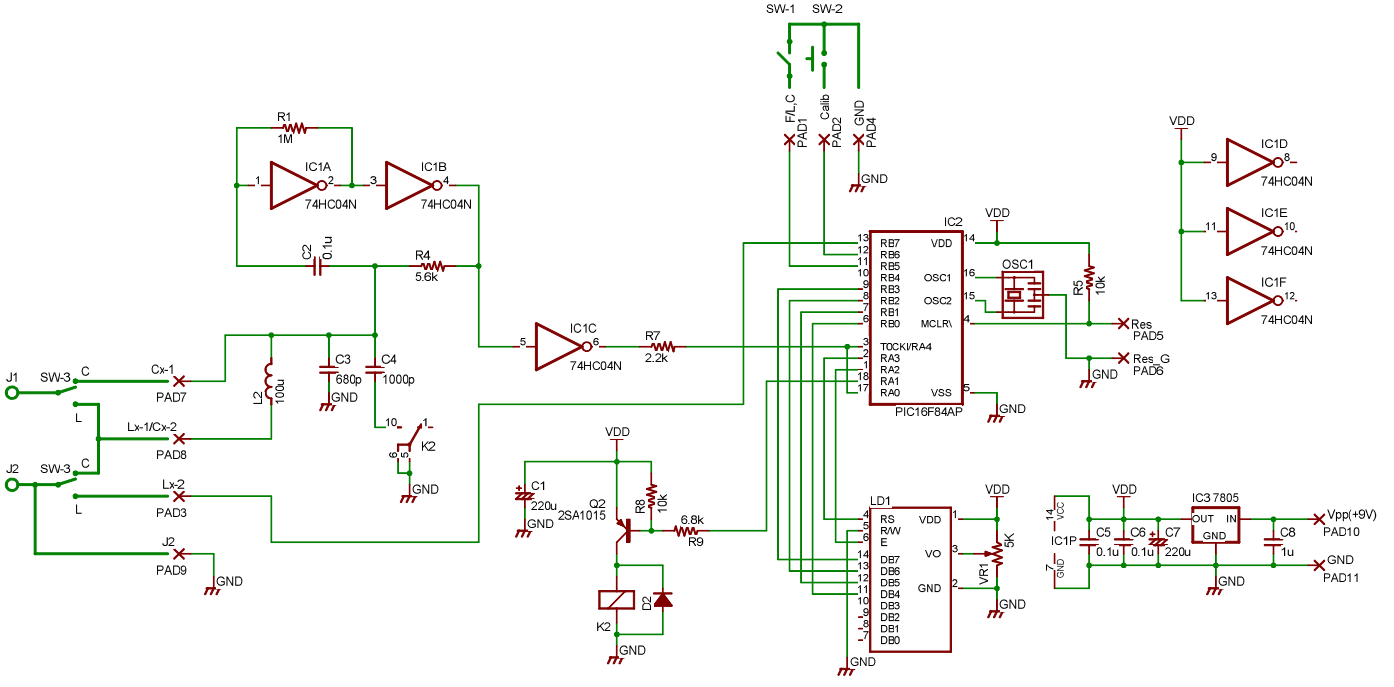
SW-1
SW-2
F/L,C
PAD1
Calib
PAD2
GND
PAD4
GND
R1
1M
IC1A
74HC04N
IC1B
74HC04N
C2
0.1u
R4
5.6k
IC1C
74HC04N
R7
2.2k
IC2
RB7
RB6
RB5
RB4
RB3
RB2
RB1
RB0
TOCKI/RA4
RA3
RA2
RA1
RA0
VDD
OSC1
OSC2
MCLR\
VSS
PIC16F84AP
VDD
OSC1
R5
10k
Res
PAD5
Res_G
PAD6
GND
GND
VDD
IC1D
74HC04N
IC1E
74HC04N
IC1F
74HC04N
J1
SW-3
C
Cx-1
PAD7
L
Lx-1/Cx-2
PAD8
J2
SW-3
C
Lx-2
PAD3
L
J2
PAD9
GND
L2
100u
C3
680p
GND
C4
1000p
K2
GND
VDD
C1
220u
GND
Q2
2SA1015
R8
10k
6.8k
R9
K2
D2
GND
LD1
RS
R/W
E
DB7
DB6
DB5
DB4
DB3
DB2
DB1
DB0
VDD
VO
GND
VDD
5K
VR1
GND
GND
VDD
IC1P
VCC
GND
C5
0.1u
C6
0.1u
C7
220u
IC3 7805
OUT
IN
GND
C8
1u
GND
Vpp(+9V)
PAD10
GND
PAD11